MV-SC5020XM

2 MP Smart Camera

Introduction

MV-SC5020XM smart camera is developed based on high-performance embedded platform with strong calculation performance. It integrates VM functions and AI deep learning algorithm, and can use more than 140 algorithms. It adopts multiple interfaces for supporting display, keyboard, mouse, etc.

Available Model

- 6 mm focal length smart camera: MV-SC5020XM-06M-WBN
- 12 mm focal length smart camera: MV-SC5020XM-12M-WBN
- 16 mm focal length smart camera: MV-SC5020XM-16M-WBN

Applicable Industry

Consumer electronics, food and pharmaceutical, packaging, etc.

Key Features

- Adopts AI deep learning algorithm to achieve OCR, object recognition, defect detection, etc.
- Integrates VM functions and supports more than 140 algorithms.
- Adopts multiple I/O interfaces, such as multiple input/output signals.
- Supports multiple communication protocols.
- Supports indicators displaying device status for easy debugging and maintenance.
- Supports ingress protection IP67.

Specification

Model	MV-SC5020XM-06M-WBN	MV-SC5020XM-12M-WBN	MV-SC5020XM-16M-WBN
Tool			
Function module	Vision Master Platform (include deep learning module)		
Communication protocol	TCP, UDP, Modbus, Serial Port, PROFINET, EtherNet/IP, Fins, MC, FTP, etc.		
Camera			
Sensor type	CMOS, global shutter		
Pixel size	3.45 μm × 3.45 μm		
Sensor size	1/2.53"		
Resolution	1600 × 1216		
Max. frame rate	100 fps		
Gain	0 dB to 37 dB		
Exposure time	15 μs to 3000 μs		
Pixel format	Mono 8		
Mono/color	Mono		
Platform			
Memory	8 GB		
Storage	64 GB		
Electrical feature			
Data interface	Gigabit Ethernet (1000 Mbit/s)		
Digital I/O	12-pin M12 connector provides power and I/O, including opto-isolated input × 3 (Line 0/1/2), opto-isolated output × 3 (Line 3/4/5), RS-232 × 1		
Power supply	24 VDC		
Power consumption	Typ. 12.3 W @ 24 VDC (with included light source on) Max. 48 W @ 24 VDC (with included light source on)		
Mechanical			
Lens mount	M12-mount, mechanical focus		
Focal length	6 mm	12 mm	16 mm
Lens cap	Half polarization lens cap by default. Transparent, full polarization, or diffused lens cap is optional.		
Light source	White light source by default. Red, blue, or IR light source is optional.		
Indicator	Power indicator (PWR), network indicator (LNK), and user-defined indicator (U1/U2)		
Dimension	Straight angle: 112.3 mm × 54 mm × 60.2 mm (4.4" × 2.1" × 2.4") Right angle: 88.7 mm × 54 mm × 82.5 mm (3.5" × 2.1" × 3.2")		
Weight	Approx. 370 g (0.8 lb.)		
Ingress protection	IP67 (under proper installation of waterproof lens cap)		
Temperature	Working temperature: 0 °C to 50 °C (32 °F to 122 °F) Storage temperature: −30 °C to 70 °C (−22 °F to 158 °F)		
Humidity	20% RH to 95% RH (no condensation)		
General			
Certification	CE, KC		

Dimension

Device (Straight Angle):

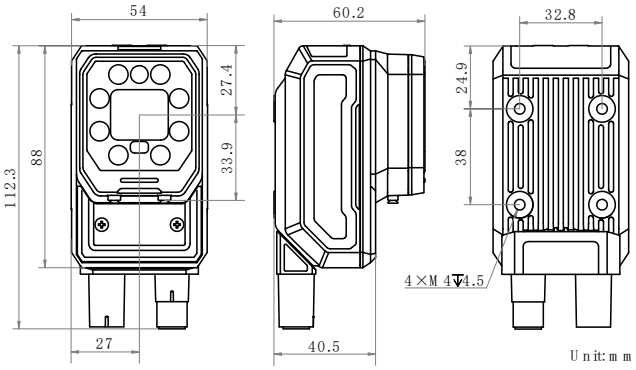

Device (Right Angle):

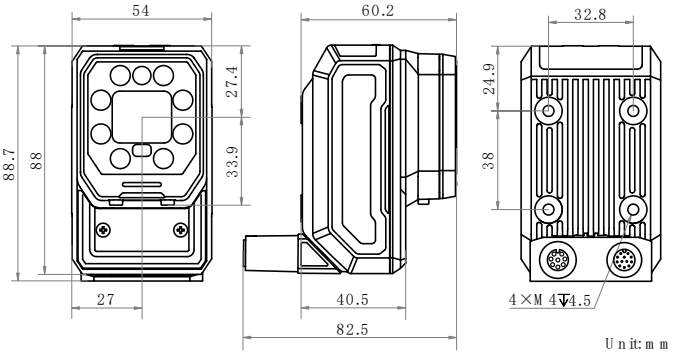

Device and Installation Bracket (Straight Angle):

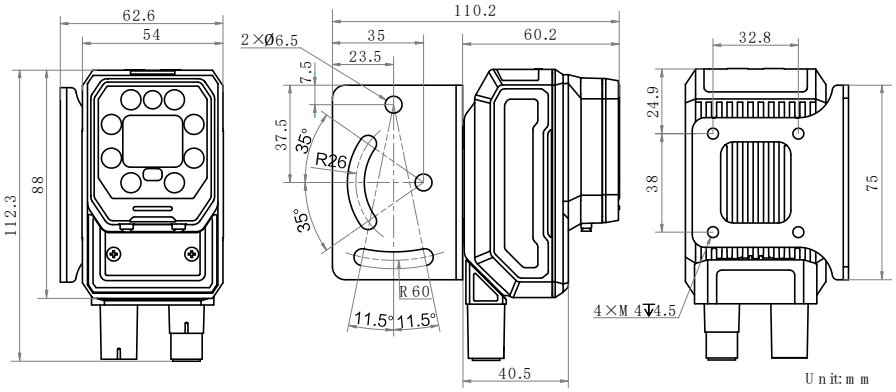

Device and Installation Bracket (Right Angle):

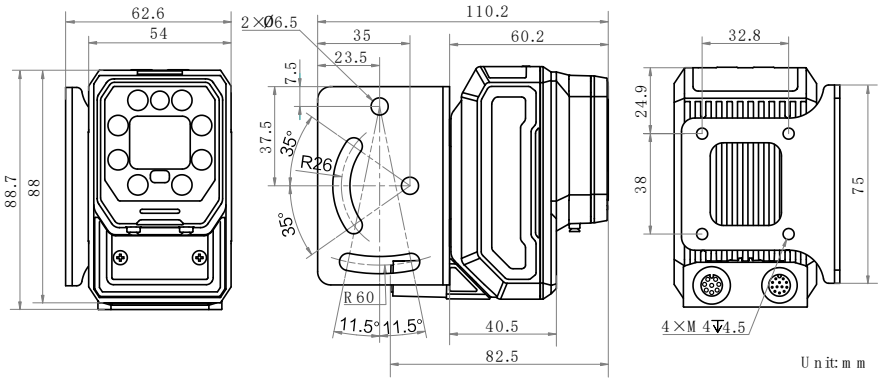

Installation Bracket:

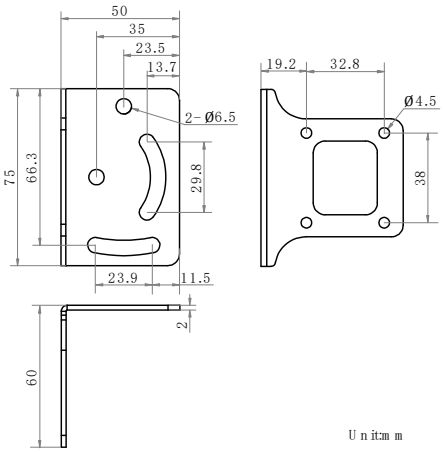

Detection Range

MV-SC5020XM-06/12/16M-WBN (Unit: mm)					
Lens Focal Length	Working Distance	Field of View		Single Pixel Accuracy	Field of View Diagram
		H	V		
6	25	23.46	18.17	0.014	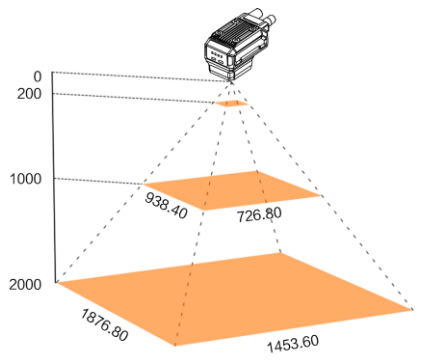
	100	93.84	72.68	0.058	
	200	187.68	145.36	0.115	
	300	281.52	218.04	0.173	
	500	469.20	363.40	0.288	
	1000	938.40	726.80	0.575	
	2000	1876.80	1453.60	1.150	
12	60	28.15	21.80	0.017	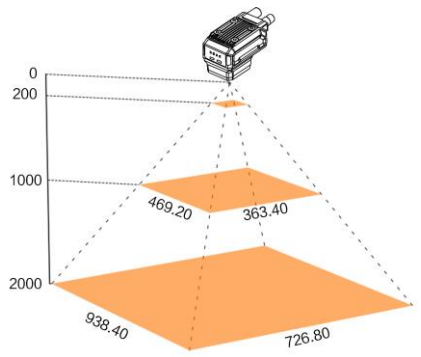
	100	46.92	36.34	0.029	
	200	93.84	72.68	0.058	
	300	140.76	109.02	0.086	
	500	234.60	181.70	0.144	
	1000	469.20	363.40	0.288	
	2000	938.40	726.80	0.575	
16	100	35.19	27.26	0.022	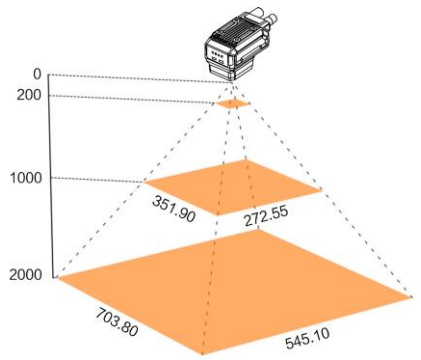
	200	70.38	54.51	0.043	
	300	105.57	81.77	0.065	
	400	140.76	109.02	0.086	
	500	175.95	136.28	0.108	
	1000	351.90	272.55	0.216	
	2000	703.80	545.10	0.431	

© Hangzhou Hikrobot Co., Ltd. All Rights Reserved.
Hangzhou Hikrobot does not tolerate any infringement. Any organization or individual may not imitate or reproduce in whole or in part of the content. The data herein is based on Hikrobot's internal evaluation. Actual data may vary depending on specific configuration and operating condition. The information herein is subject to change without notice All the content has been checked conscientiously. Nevertheless, Hikrobot shall not be liable to damages resulting from errors, inconsistencies or omissions.